Parts Catalog



GHPSU424G

Step Up Hot Plate
Gas Cooking Equipment
Model: GHPSU424G

8/15/2023 Rev A
IMPORTANT!
TO EXPEDITE SHIPMENT OF PARTS, ALWAYS SPECIFY MODEL, REV,
PART NUMBER, AND SERIAL NUMBER OF UNIT.

GLOBE FOOD EQUIPMENT COMPANY
2215 East River Road
Dayton, Ohio 45439

Parts Department
Toll Free 1-800-745-6238 · Fax (937) 290-0585
E-Mail: info@globefoodequip.com
Website: www.globefoodequip.com

Not for resale

© Globe Food Equipment Company, 2023

Table of Contents

Description	Page
GHPSU424G Step Up Hot Plate Components	4
GHPSU424G Gas Orifice Elevation Chart	6

GHPSU424G Step Up Hot Plate Components

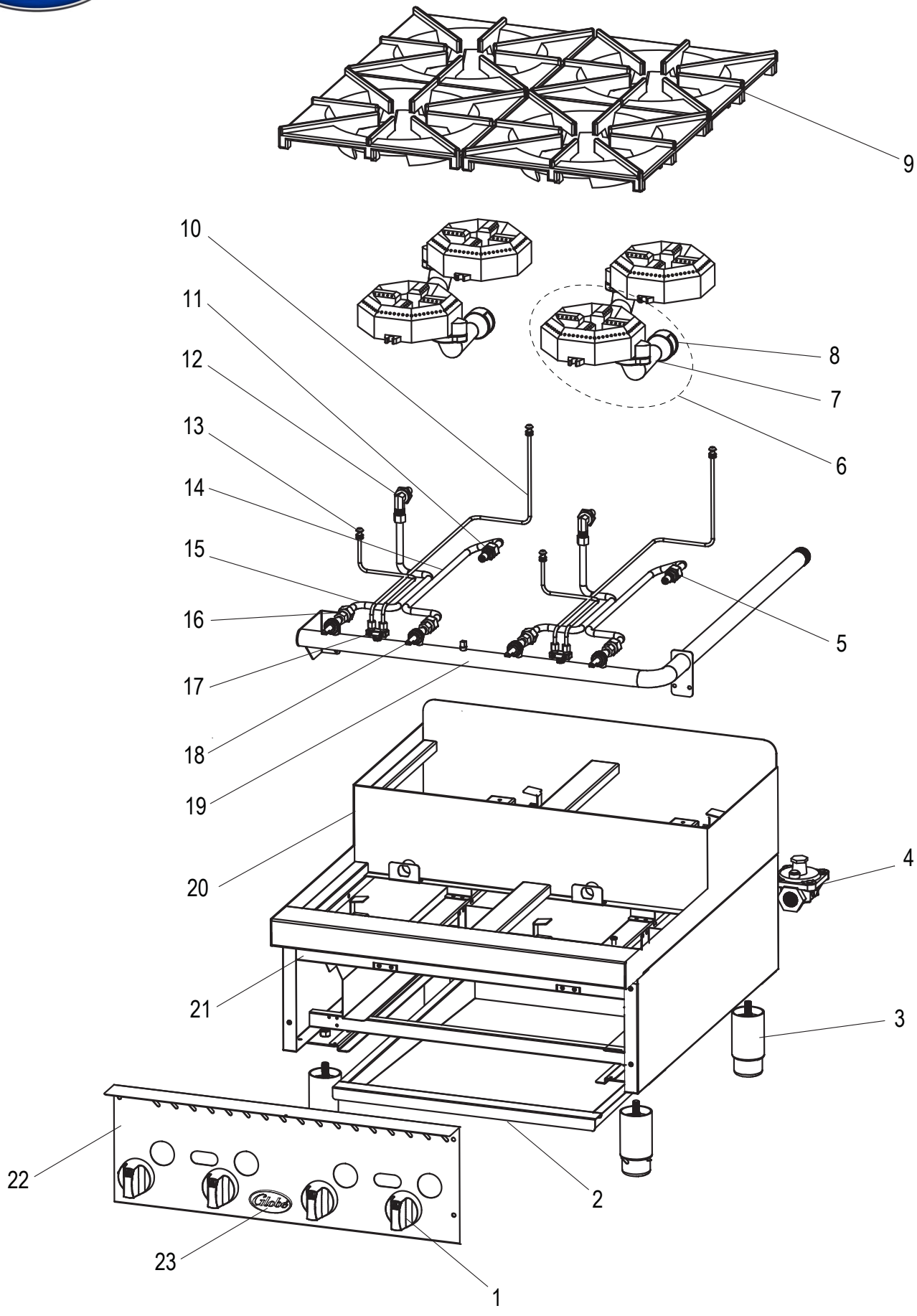

© Globe Food Equipment Company

GHPSU424G Step Up Hot Plate Components

Item	Part Number	Description	Qty	Serial Number
1	U01021005188	Control Knob	4	
2	U01082	Drip Tray	1	
3	U01021005165	Foot	4	
4	U01221069501	Regulator	1	
5	U06051470839	Hood Orfice #43	4	
5	U06051470824	Hood Orifice #52	4	
5	U06051470869	Hood Orfice #44	4	
5	U01201068653	Hood Orfice #53	4	
5	U06051470899	Hood Orfice #45	4	
5	U06051470695	Hood Orfice (2 Pack) #46	4	
5	U01201068654	Hood Orfice #54	4	
5	U06051470881	Hood Orfice (2 Pack) #48	4	
6	U02038	Burner Assembly	4	
7		Burner	1	
8		Air Shutter	1	
9	U01072	Trivet	4	
10	U02031	Back Pipe, Pilot Assembly	2	
11	U02032	Front Main Injector	2	
12	U02033	Rear Main Injector	2	
13	U02034	Front Pipe, Pilot Assembly	2	
14	U02035	Front Main Gas Pipe	2	
15	U02036	Rear Main Gas Pipe	2	
16	U02037	Connection Valve	4	
17	U01201068502	Manual Control Valve (A18)	4	
18	U01201068508	Pilot Valve	2	
19		Manifold Assembly	1	
20		Main Enclosure	1	
21		Isolating Plate, Front	1	
22		Control Panel	1	
23	U01021005383	Globe Badge	1	
24	U01021005186	Ignition Bar (Not Shown)	1	
25	U04031317503	Control Knob Overlay (Not Shown)	1	

© Globe Food Equipment Company

GHPSU424G Gas Orifice Elevation Chart

Model	Rated Input Per Burner (BTU/HR)	Elevation		Elevation	
		0-2000 ft		2000 - 4000 ft	
		Nat	LP	Nat	LP
Step Up Hot Plate	30000	U06051470839 (# 43)	U06051470824 (#52)	U06051470869 (#44)	U01201068653 (#53)
		Elevation		Elevation	
		4000 - 6000 ft		6000 - 8000 ft	
		Nat	LP	Nat	LP
Step Up Hot Plate	30000	U06051470899 (#45)	U01201068653 (#53)	U06051470695 (#46)	U01201068654 (#54)
		Elevation			
		8000 - 10000 ft			
		Nat	LP		
Step Up Hot Plate	30000	U06051470881 (#48)	U01201068654 (#54)		

© Globe Food Equipment Company